makers for life


Timber Tilt Door

Steel-Line garage doors

Tilt Doors

If you're ready to draw the line at average and reach for better call us today.

To locate Steel-Line branches across Australia call: **1300 427 243** or visit **steel-line.com.au**

The most prominent visual feature of your home is often the garage door. So it makes sense to choose our stunning range of tilt doors, because it is the ideal combination of strength and aesthetic appeal.

Individually manufactured to fit most garage openings, the tilt door offers significant design options to meet most imaginations with safety and convenience in both a Flush mount (level with surrounding façade) and behind fit methods.



Timber Tilt Door



Cedar Battens Tilt door



Vertical Shiplap Tilt door



Western Red Cedar Batton onto Plywood Tilt Door

Benefits

- Excellent protection against harsh weather conditions
- Ability to control tilt doors with an automatic garage door opener
- Individually created and installed to suit the exact size of your garage opening
- Convenience

Features

- Spring balanced to a maximum total weight of 175Kgs
- Small headroom (min 150mm) and side room (min 100mm) clearance requirements
- Steel frames

Options

- Timber
- Colorbond® steel - K Panel, Mini Corry, Corrugated etc.
- Windows
- Flush mount fit so that tilt garage door face is same level as the surrounding façade
- Top and/or bottom part perforation



Flush Mount Timber Clad Tilt Door

Tilt Garage Door Openers

Fit your tilt door with an automatic opener for hassle free entry to and exit from your garage.

All of our openers are engineered to the highest standards ensuring easy operation, optimum performance, long life and peace of mind.



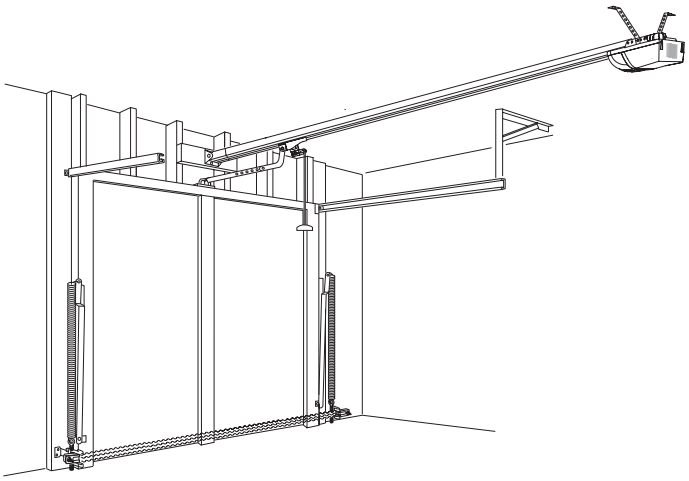

Soft Start and Stop Function

This feature is designed to allow for a quiet and smooth garage door operation, which is important when the garage is located close to bedrooms or living areas.

Auto Reverse System

For added safety, each installation comes with this automated feature that causes the garage door to immediately stop and reverse when it comes into contact with an object.

Auto Sensing Force

During operation the force required is constantly monitored and adjusted to ensure economical operation and reduced wear and tear.

Courtesy Light

This courtesy light is the most convenient way to navigate through your garage and to get in and out of your car. The light automatically switches on and off as you open and close your garage door.

Wireless Wall Button

Can be installed near an internal access door to your garage giving you greater convenience to open and close your garage door.



Digital Limit System

Equipped with digital limit system for ease of programming during installation.

Manual Release

In case of power failure you can simply activate the manual release to open your garage door.

Remote Handsets

The key ring remote handsets are small and convenient with the ability to operate up to four garage doors or gates from the one unit. A must have for every set of keys in the house.



Quality and Adaptability

Our garage door openers are manufactured from quality composite materials, and have been engineered to the highest standard. They can also be fitted to most popular brands of sectional garage doors with accessories to suit your requirements.

Steel-Line | simply safer

Technical Details

The tilt door is built in a single panel and reinforced by an internal steel frame. It opens outwards, on a tilt, swinging upwards until fully open. This allows a tilting-style door to be installed and manufactured to fit spaces of virtually any size. Our tilt doors offer the perfect solution for that specialty appearance up to 2.7m high x 6.5m wide and where garages have restricted side or head room. The maximum weight for tilt doors with cladding is 175 kg.

All the tilt doors are individually designed and manufactured to suit the exact size of our client's garage opening. Should floors slope from one side to the other, the door panel can be manufactured to incorporate an angled bottom rail, or taper, to assist in fitting the garage opening precisely and provide the best finish.

MINIMUM HEADROOM IS SHOWN / PANEL THICKNESS CAN CHANGE DEPENDING ON THE DOOR DESIGN

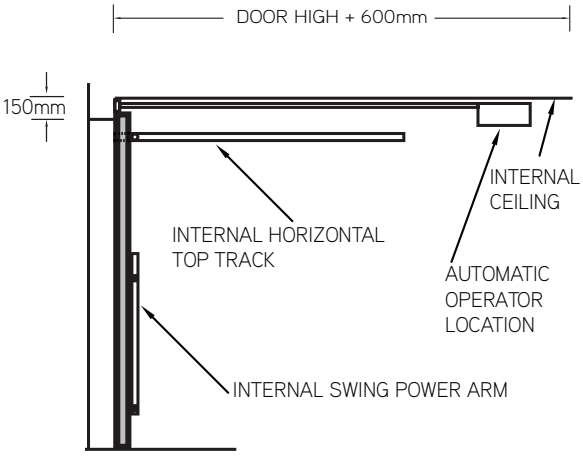

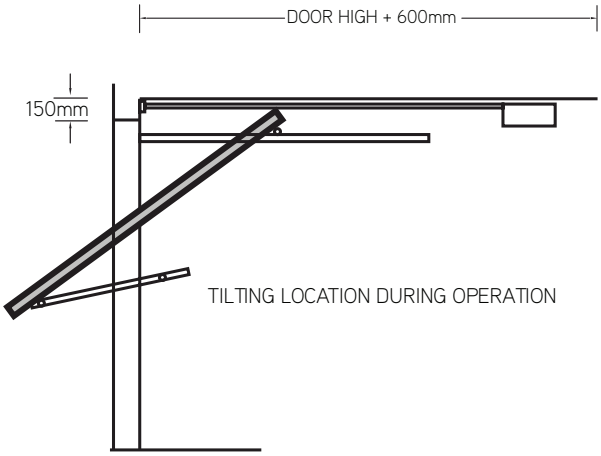

PLAN VIEW

Grey shaded areas denotes head & jamb noggins by builder

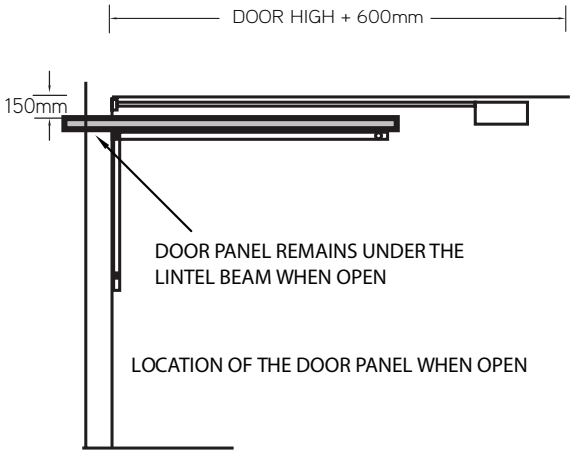

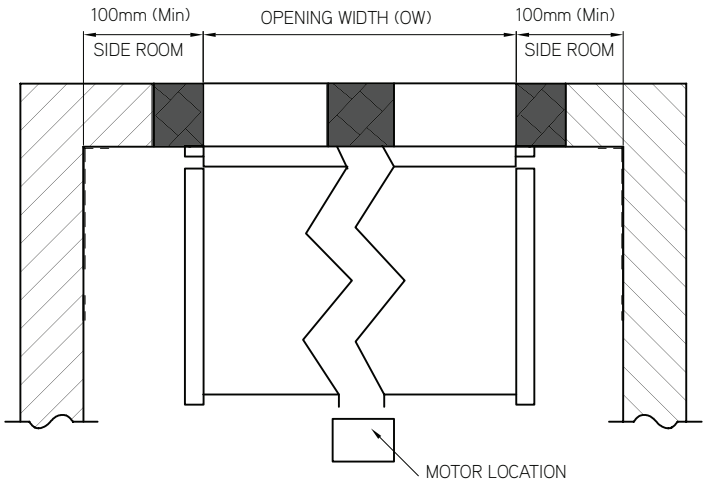

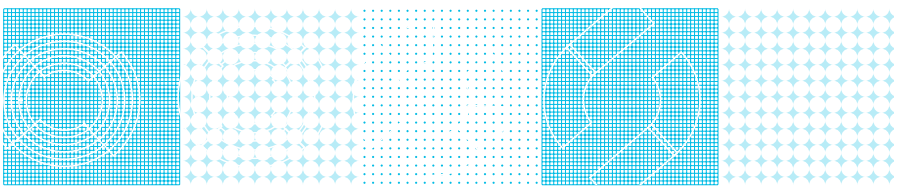





Finishes

The tilt garage door provides the largest range of exterior design and finish options for your home. The choice of materials is almost as varied as your imagination allows, and commonly includes plywood and moulding, Western Red Cedar, aluminium composite cladding. You can even add windows and personal access doors to your tilt door.



Western Red Cedar Coach Tilt door



Flush Mount Tilt door in UniCote LUX Ashwood



Natural Timber Tilt Door



Plywood Tilt Door



Custom Tilt door clad in vertical Basalt Monopanel



Flush Mount Tilt door with Knotwood battens

Copyright © 2026 Steel-Line Garage Doors Pty Ltd.
All rights reserved
ABN: 52 124 164 003

Copyright © 2026 Steel-Line Installations Pty Ltd.
All rights reserved
ABN: 97 128 107 344 I QBCC: 1129059 I CBS: SA 223285

Steel-Line
makers for life

Call 1300 427 243 | steel-line.com.au